■ FL0102C

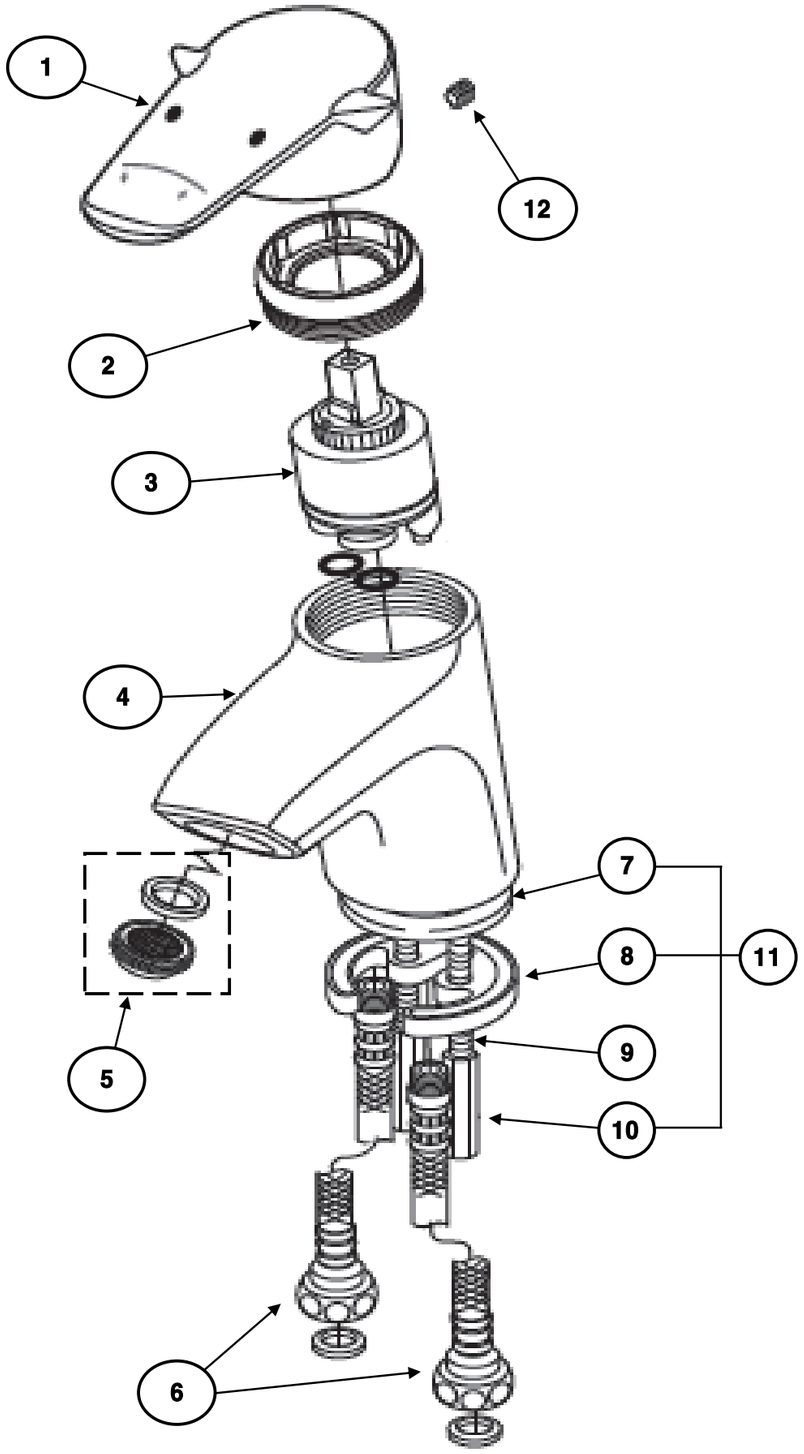

구분	품번	품명	비고
1	AH296Y	LEVER Ass'Y	42123 포함
2	26501-1C	RETAINER COVER Ass"Y	
3	AC117	CARTRIDGE Ass'Y	
4	12809XC	BODY	
5	AE051PLB	AERATOR Ass'Y	COIN SLOT
6	AD242C-40C	BRAID HOSE Ass'Y (냉)	
	AD242H-40C	BRAID HOSE Ass'Y (온)	
7	19675	GASKET	
8	63385	THRUST WASHER	
9	23171D	STUD SCREW	
10	24266D	LOCK NUT	
11	A63385-3	THRUST WASHER Ass'Y	19675 (1) + 63385 (1) + 24266D (2)
12	42123	SCREW	